FLOW SIGHT GLASS GAUGE

T SERIES – Thread Connection With Spring Paddle

The flow sight glass was designed with spring paddle for easy observation of flowing fluid from any direction.

TA TYPE

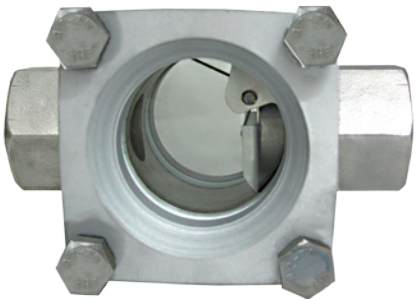

TB TYPE

Technical Data

Service: – Compatible gas and liquid – Water treatment system
– Industrial flow system – Double window indication

Material: Body– SS304, SS316, SS316L; Paddle– SS316; Spring – SS316
Gauge–Tempered glass; Gasket–Teflon, Gore Tex, Graphite

**Graphite unsuitable for TA type.*

Max working temperature: 150°C (Teflon), 300°C (Gore-Tex)
Max working pressure: TA type: 10kg/cm² @25°C water;
TB type: Available for 15, 25 and 40kg/cm² @25°C water

Approvals: EAC CE 2810

Dimension

(A) TA Type

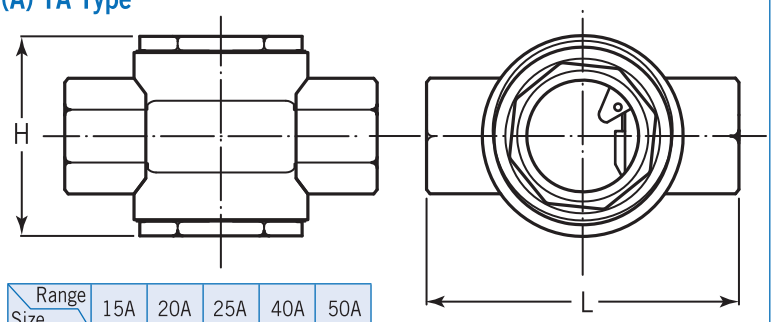

Size \ Range	15A	20A	25A	40A	50A
L	114	114	114	130	150
H	72	72	72	120	136

(B) TB Type

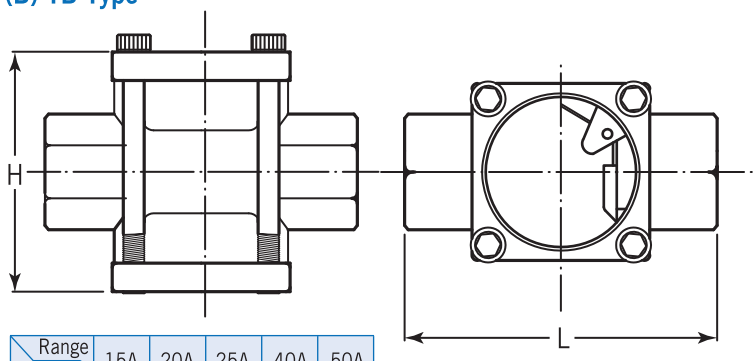

Size \ Range	15A	20A	25A	40A	50A
L	114	114	114	130	150
H	72	72	72	115	129

unit=mm

Mounting Position

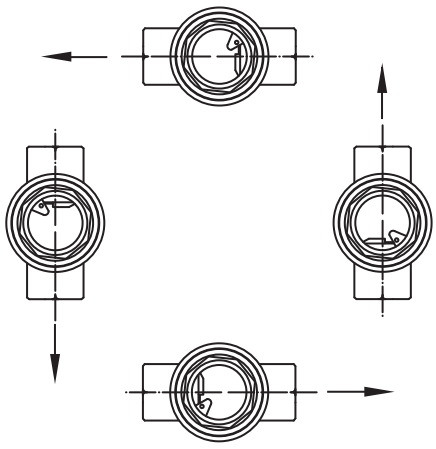

Ordering Information

TA/TB	Code	Body Material
		(A) SS304 (B) SS316 (C) SS316L

Code	Size
	(1) 15A (2) 20A (3) 25A (4) 40A (5) 50A

Code	Connection Thread
	(1) NPT (2) PF (3) Option

Code	Gasket Material
	(1) Teflon (2) Gore-Tex (3) Graphite *(unsuitable for TA type)*

Code	CE Mark Request
3	Stamp
4	Without

Code	Max. Working Pressure
0	10 kg/cm² (for TA type only)
1	15 kg/cm² (for TB type)
2	25 kg/cm² (for TB type)
3	40 kg/cm² (for TB type)

[ ] [ ] [ ] [ ] [ ] + [ ] [ ] Complete Ordering Code

WWW.NEW-FLOW.COM • TEL: 886-7-8135500 • FAX: 886-7-8225588 • Email: info@new-flow.com