PRESSURE REDUCING REGULATOR

PRU125 – *Self Venting Type Available*

Plastic Knob

Technical Data

For using gas and liquid
Inlet pressure: 500, 3500 Psig maximum
Adjustable outlet pressure in ranges: 25, 50, 100, 250, 500 Psig
Operating temperature: -40 to 175°C
Diaphragm material: 316L stainless steel
Body material: 316L stainless steel
Seat material: Teflon, PFA available
CV flow coefficients: 0.06
Process connection: ¼"NPT female
Two gauge connection ports are: ¼"NPT female
Use no oil: available
Self Venting: 1/8"NPT female

Standard Port Configuration

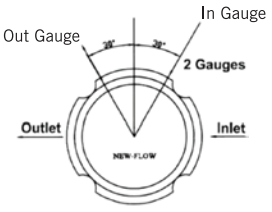

A

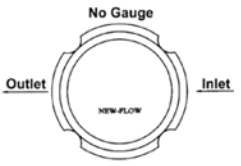

B

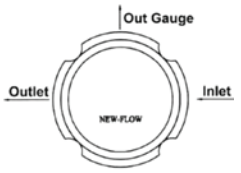

C

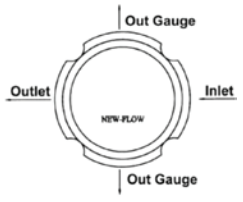

D

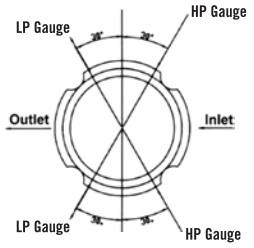

E

Dimensions

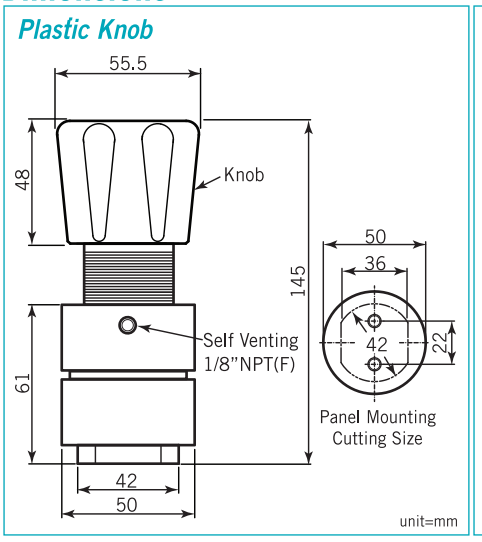

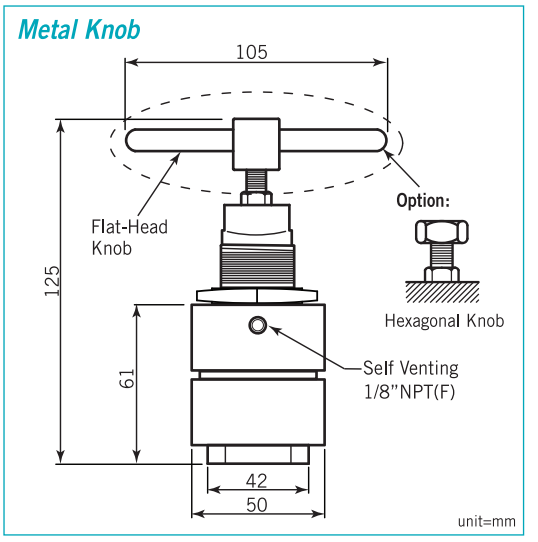

Ordering Information

PRU125	Code	Body Material
	1	316L stainless steel

Code	Knob Material				
A	Platic	B	Metal (Flat-Head)	C	Metal (Hexagonal)

Code	Max. Inlet Pressure
1	500 Psig
2	3500 Psig

Code	Out Pressure Range				
1	1~25 Psig	2	2~50 Psig	3	2~100 Psig
4	3~250 Psig	5	5~500 Psig		

Code	Seat Material
A	Teflon (Max. inlet pressure 500 Psig)
B	PFA (Max. inlet pressure 3500 Psig)

Code	Port Configuration				
	A	B	C	D	E

Code	Self Venting		
W	With	O	Without

PRU125								Complete Ordering Code

WWW.NEW-FLOW.COM • TEL: 886-7-8135500 • FAX: 886-7-8225588 • Email: info@new-flow.com