PRESSURE GAUGE WITH MICRO SWITCH EXPLOSION PROOF TYPE

PIS5000X

Explosion Proof Type
Micro Switch
Measuring Range: (-1)~2500 kg/cm²

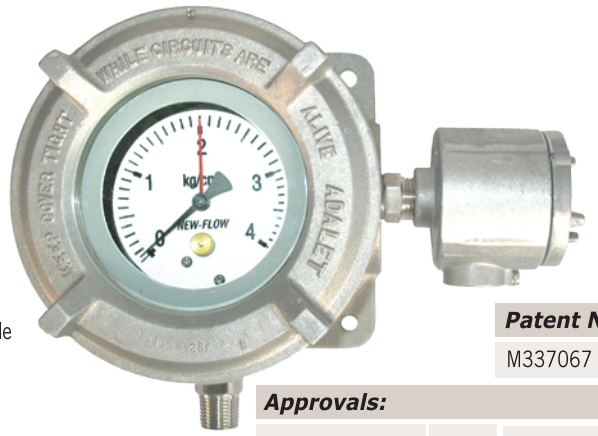

Patent No.
M337067

Approvals:

ABS TYPE APPROVED PRODUCT

CE

TD0400TJ
工電(2016)第00133號
(ITRI)2018第07-00017號

Switches with UL & CSA Recognized and File No. E12252.

Technical Data

Material: Bourdon tube SS316; Wetted parts SS316
Housing: Die cast aluminum alloy, and SS316 available
Process Connection: ⅜", ½", ¼" NPT male; option with adaptor available
Electronic Connection: ½" or ¾" NPT, G female thread, or M20xP1.5, M25xP1.5 available
Accuracy: Gauge indication ±1.0% F.S
Pressure Limited: Over range protected 130% of full scale range
Switch Form: One setting point: SPDT x 1 or Two setting points: SPDT x 2 available

NOTE. Negative pressure only 「one setting point」 available.

Set Point: Full scale range available
Switch Dead Band: Please check the *Range Selection Table* for SPDT x 1 & SPDT x 2
Switch Data:

	AC Load			DC Load
Nominal Operating Voltage	250 VAC max.		125 VAC max.	30 VDC max.
Current	3A	5A	5A max.	3A max. (inductive load)
Code	*1*	*2*		
Contact Material	Pure silver 999.9			Pure silver 999.9
Ambient Temperature	-20°C~+70°C			-20°C~+70°C

Dimensions-mm

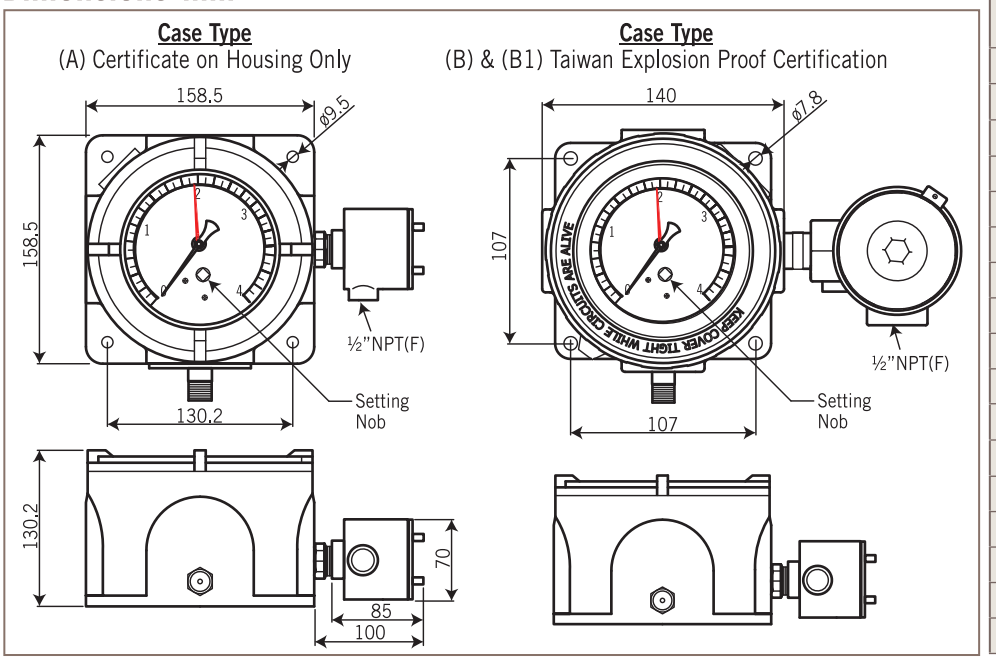
Case Type
(A) Certificate on Housing Only
Case Type
(B) & (B1) Taiwan Explosion Proof Certification

Range Selection Table – KG/CM²

Code	Range	Dead Band	
		SPDTx1	SPDTx2
000	0~(-1)	±2.5%	
001	0~1	±2%	±5%
002	0~1.6	±2%	±4%
003	0~2.5	±2%	±4%
004	0~4	±2%	±4%
005	0~6	±2%	±2%
006	0~10	±2%	±2%
007	0~16	±2%	±2%
008	0~20	±2%	±2%
009	0~25	±2%	±2%
010	0~40	±2%	±2%
011	0~60	±2%	±2%
012	0~100	±2%	±2%
013	0~160	±2%	±2%
014	0~250	±2%	±2%
015	0~400	±2%	±2%
016	Optional		

Ordering Information

PIS5000X	Code	Process Connection (Male)
		(1) 3/8"NPT **(2)** 1/2"NPT **(3)** 1/4"NPT **(O)** Option

Code	Conduit Connection (Female)
	(A) ½"NPT **(B)** ¾"NPT **(C)** G½" **(D)** G¾"
	(E) M20 x P1.5 **(F)** M25 x P1.5 **(O)** Option

Code	Wetted Parts Material
S	SS316

Code	Switch Function
1	One setting point SPDT x 1
2	Two setting point SPDT x 2

Code	Measuring Range
	Please refer to the selection table and fill in the request range.

Code	Explosion Proof Type / Housing Material
A	***Certificate on Housing Only / Aluminum alloy*** Class I, Groups B, C & D; Class II, Groups E, F & G; NEMA 4,7,9
B	***Taiwan Explosion Proof Certification / Aluminum alloy*** Ex d IIB + H2 T6 Gb
B1	***Taiwan Explosion Proof Certification / SS316*** Ex d IIB + H2 T6 Gb

Code	Switch Rating
1	3A/250VAC, 5A/125VAC 3A/30VDC (Standard)
2	5A/250VAC, 5A/125VAC 3A/28VDC (Option: Please contact to New-Flow first)

PIS5000X						+			Complete Ordering Code

- Scale Unit: MPa, Kg/Cm², Bar available
- 1 bar= 0.1 MPa, 1 bar= 1.01972 kg/cm², 1 Pa= 1 x 10^{-6} MPa, 1 MPa= 10.197 kg/cm²
- Negative pressure only "one setting point" available.

WWW.NEW-FLOW.COM • TEL: 886-7-8135500 • FAX: 886-7-8225588 • Email: info@new-flow.com