EXPLOSION PROOF TYPE CABLE GLAND GB SERIES

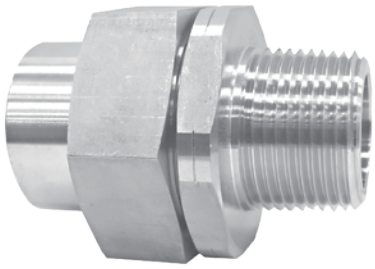

Explosion Proof : Ex d IIC Gb / Ex tb IIIC Db

Technical Data

Connection Size: ½", ¾", 1" NPT and PT available
Material: Body: SS316 or SS304;
Packing: C.R. (Chloroprene Rubber)
Working Pressure Limit: 5 Bar
Min. Temperature: -20°C for C.R. (Chloroprene Rubber)

Approvals:

TD0400TJ
(ITRI)2021第07-00102X號

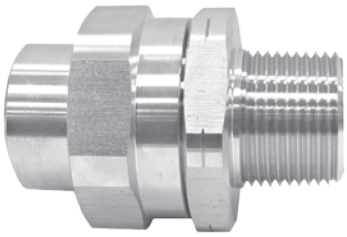

Dimensios

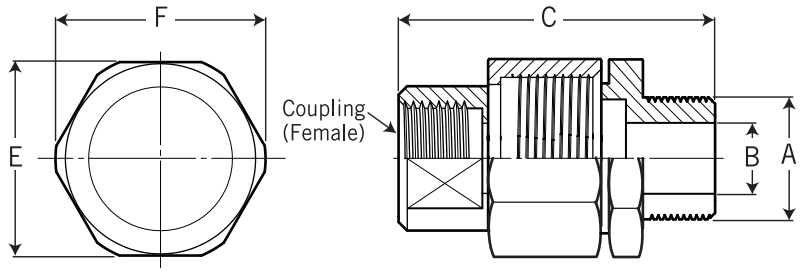

unit=mm

Body Type \ Size	Cable O.D	Packing I.D	A (Thread Male) NPT	Coupling (Female)		B	C	E	F
GB15	6~8	8	½"NPT P=1.814	A	½"NPT	12.4	64	35	38
	8~10	10							
	10~12	12		D	½"PT				
GB20	10~12	12	¾"NPT P=1.814	B	¾"NPT	16.5	66	41	45
	12~14	14							
	14~16	16		E	¾"PT				
GB25	16~18	18	1"NPT P=2.209	C	1"NPT	23	72	51	56
	18~20	20							
	20~22	22		F	1"PT				

Parts List & Material

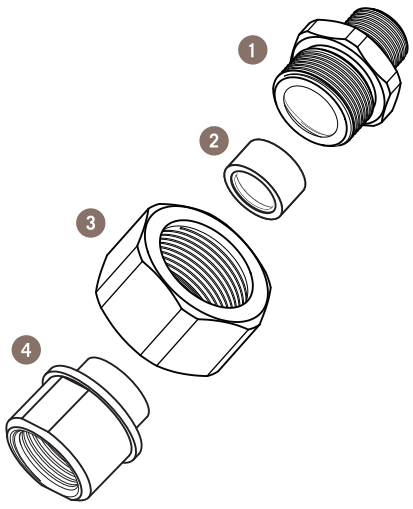

Item	Part Name	Material
1	Thread	SS316 / SS304
2	Packing	C.R. (Chloroprene Rubber)
3	Body	SS316 / SS304
4	Coupling	SS316 / SS304

Ordering Information

GB	Code	Body Type		
		GB15	GB20	GB25

Code	Body Material		
A	SS316	B	SS304

Code	Thread Connection Size (Male)				
½"	½"NPT	¾"	¾"NPT	1"	1"NPT

Code	Packing I.D
	Please refer to the "Packing I.D" column of connection size table, and fill out the specification in the code as request.

Code	Packing Material
C	CR (chloroprene rubber)

Code	Coupling Connection Size (Female)		
A	½"NPT	D	½"PT
B	¾"NPT	E	¾"PT
C	1"NPT	F	1"PT

GB							Complete Ordering Code

Ordering code example:
GB15-A-½"-12-C-A

→ GB15= Type
→ A= SS316
→ ½"= 1½"NPT, male
→ 12 = Packing I.D ø12mm
→ C = CR
→ A = ½"NPT

WWW.NEW-FLOW.COM • TEL: 886-7-8135500 • FAX: 886-7-8225588 • Email: info@new-flow.com