THREAD TYPE DIAPHRAGM SEAL
DT108

DT108 diaphragm seal is designed low cost type to be used in highly viscous process media such as pulp, paper, waste water treatment, and plastic/chemical process industries. DT108 is easy to assemble with pressure gauges, pressure switches, and pressure instruments.

Technical Data

Instrument connection: female thread ¼" to ½" BSP or NPT
Process connection: ¼" to ½" Thread BSP or NPT
Temperature limited: -40~+150℃ cooling element or capillary line up to 350℃
Pressure range limited: Maximum up to 40 kg/cm²
Minimum -760 mmHg ~0, 0~0.6 kg/cm²
Material: Upper & Lower housing-SS316 (standard), others on request
Membrane: SS316L (standard); Options– Hastelloy C276, tantalum, and others on request.

Dimensions

Item	Description of Parts
a	Upper housing
b	Lower housing
c	Membrane
d	Instrument connection
e	Filling port
f	Process connection

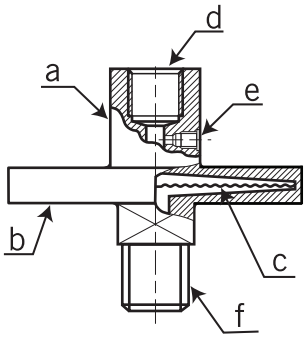

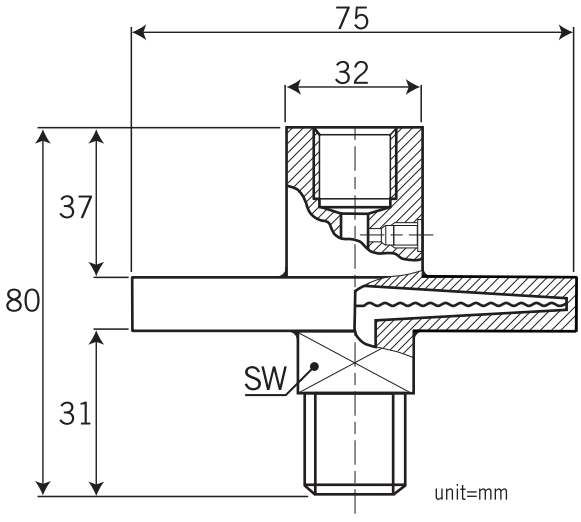

Ordering Information

DT108	Code	Instrument Connection (Female)
		(A) ¼"BSP (B) ¼"NPT (C) ⅜"BSP (D) ⅜"NPT (E) ½"BSP (F) ½"NPT

Code	Process connection rating
	(1) ¼" BSP (2) ¼" NPT (3) ⅜"BSP (4) ⅜"NPT (5) ½"BSP (6) ½"NPT (7) Option

Code	Thread
	(M) Male (F) Female

Code	Upper housing material
	(S) SS316(standard) (O) Option

Code	Lower housing material
	(S) SS316(standard) (O) Option

Code	Membrane material
	(1) SS316L (2) Hastelloy C276 (3) Tantalum (4) Option

DT108							Complete ordering code